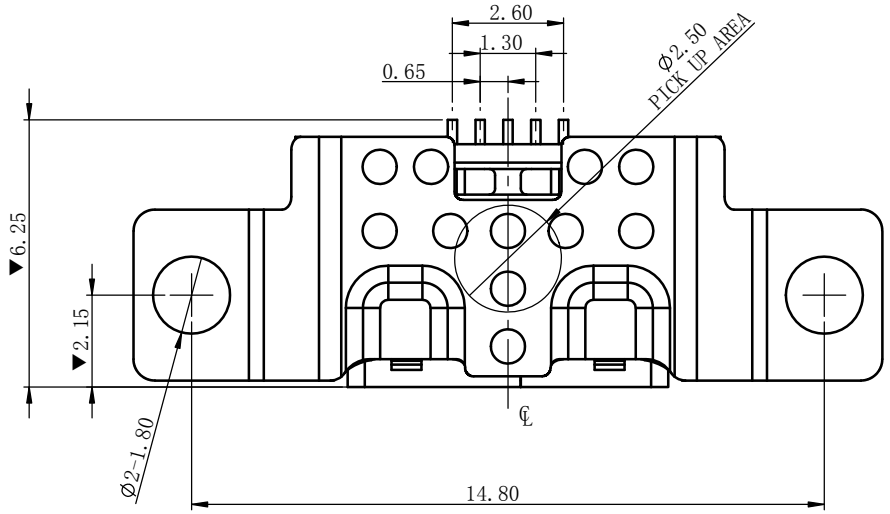

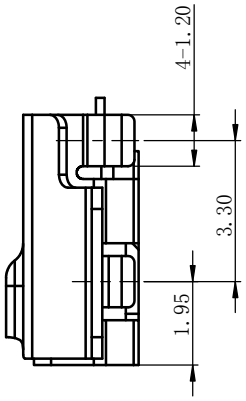

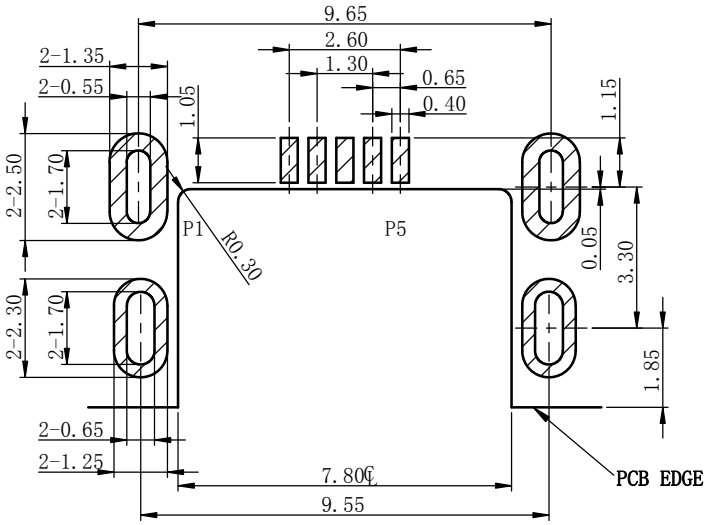

RECOMMENDED PCB LAYOUT
TOLERANCE:±0.05
STENCIL THICKNESS 0.10mm

CONTACT NO.	SIGNAL NO.
1	VBUS
2	D-
3	D+
4	ID
5	GND
SHELL	SHIELD

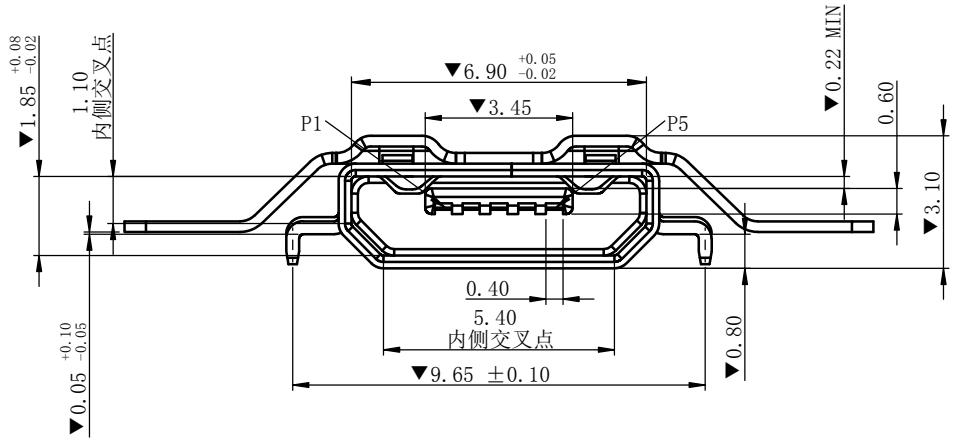

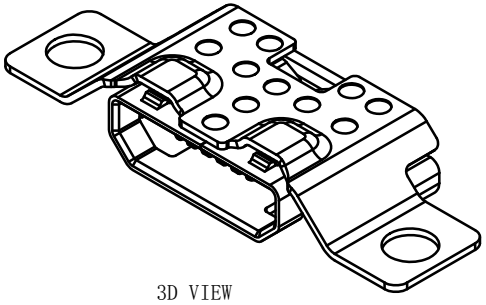

3D VIEW

NOTES:
1. MATERIAL:
   HOUSING:LCP
   CONTACT:COPPER ALLOY (C2680-H)
   SHELL:STAINLESS STEEL(SUS304-3/4H).
2. FINISH:
   CONTACT:30u″ AU MIN PLATED ON CONTACT AREA
   1u″ AU MIN ON SOLDER AREA
   80u″ NI MIN UNDERPLATED OVERALL
   SHELL: 50u″ NI MIN UNDERPLATED OVERALL
   1u″ AU MIN ON SOLDER AREA
3. PRODUCT SPECIFICATIONS:
   3-1 Voltage: 12V AC
   3-2 Current: 3A.
   3-3 OPERATION TEMPERATURE:-45° TO +85°
   3-4 STORAGE TEMPERATURE:-45° TO +85°
4. ALL DIMENSIONS MARKED ▼ MUST BE CONTROLLED BY QC.
5. GP PASSED ACCORD WITH ROHS STANDARD.
6. ALL DIMENSIONS MARKER (XX) MUST BE MEASURE BY FAI.

DESCRIPTION	MATERIAL	FINISH	Q'TY
SHELL	STAINLESS STEEL (SUS304-3/4H, T=0.30mm)	50u " NI MIN UNDER PLATED OVERALL 1u″ AU MIN ON SOLDER AREA	1
CONTACT	COPPER ALLOY (C2680-H, T=0.20mm)	30u″ AU MIN ON CONTACT 1u″ AU MIN ON SOLDER AREA 80u″ NI MIN UNDER PLATED OVERALL	5
HOUSING	LCP, BLACK, UL 94V-0		1

REV.	ECN NO.	DESCRIPTION	DATE
A		NEW	01/03'2018

UNITS: mm
DATE: 01/08'2018
SCALE: 10 / 1
SHEET: 1 / 1
REV. A

GENERAL TOLERANCE

X.	±0.30	X.°	±2.00°
.X	±0.20	.X°	±1.00°
.XX	±0.10	.XX°	±0.50°
.XX	±0.05		

MATERIAL: SEE NOTE
FINISH: SEE NOTE

DRAW:
CHECKED:
APPROVE:

PART N0: U63-AB05D250
TITLE: MICRO USB 5PIN 板上1.60mm 点焊全插
DRAWING NO:

昆山捷皇电子精密科技有限公司
HONGRIDA ELECTRONIC TECHNOLOGY CO,LTD.